Exploded View Explosionszeichnungen Vues Éclatées Plano De Despiece 展開図 爆炸图

Front Vorne Avant Delantero フロント 前

MOJAVE EXB FULL OPTION ROLLER

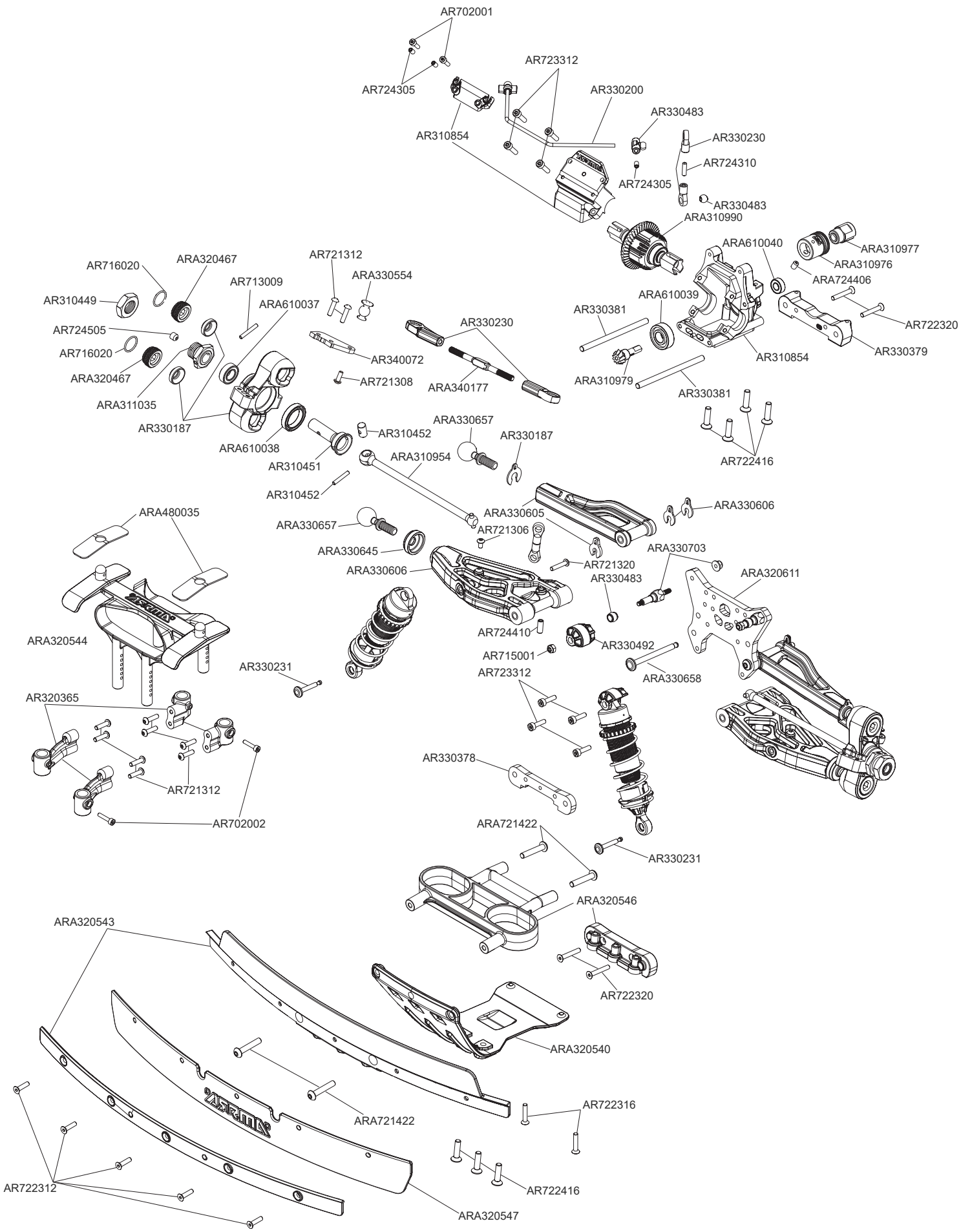

©2020 Horizon Hobby, LLC. ARRMA RC is a trade name of Horizon Hobby Ltd.
Horizon Hobby Ltd is a subsidiary of Horizon Hobby LLC

Exploded View Explosionszeichnungen Vues Éclatées Plano De Despiece 展開図 爆炸图

Centre Center
Centre Centro
センター 中心

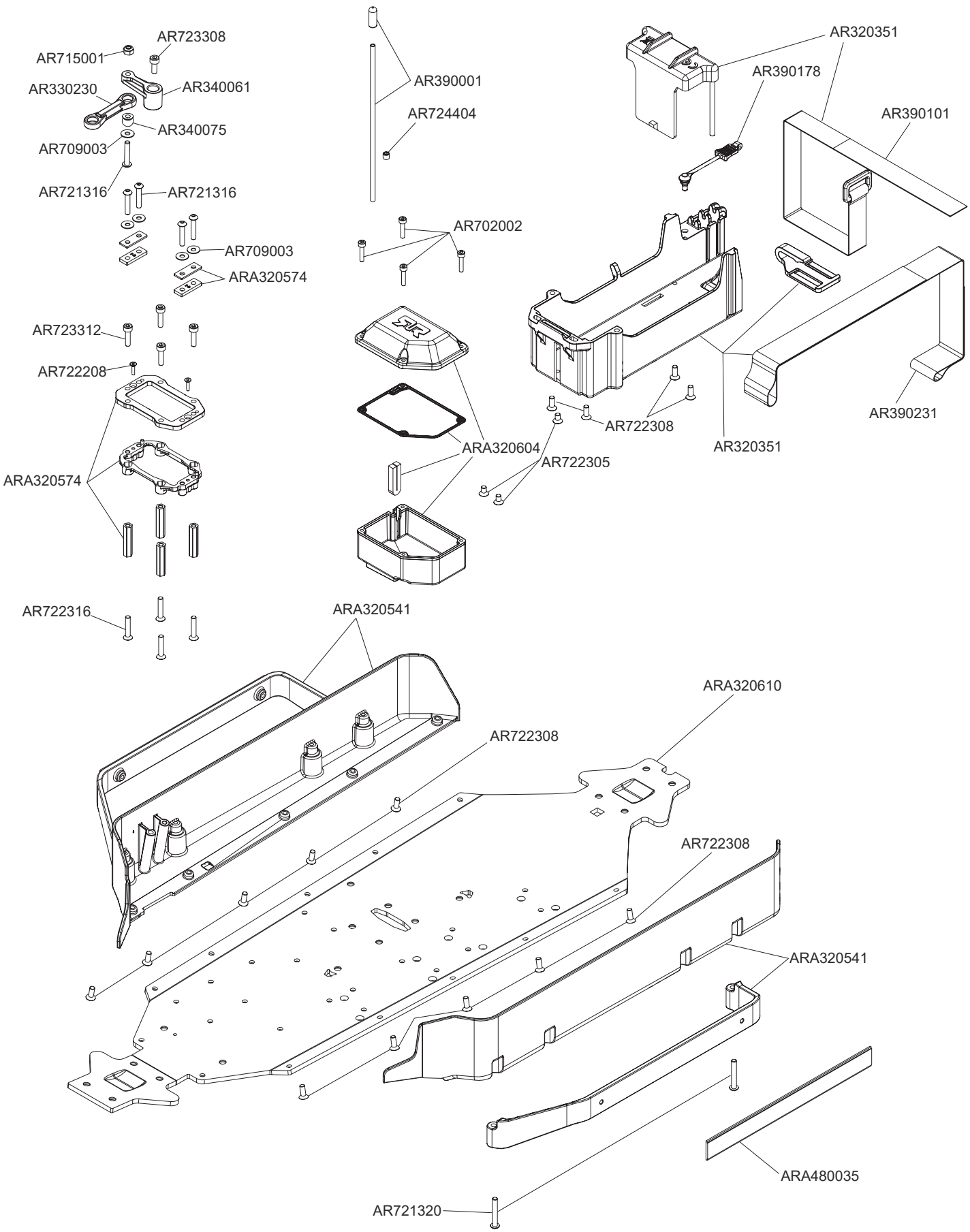

©2020 Horizon Hobby, LLC. ARRMA RC is a trade name of Horizon Hobby Ltd.
Horizon Hobby Ltd is a subsidiary of Horizon Hobby LLC

Exploded View Explosionszeichnungen Vues Éclatées Plano De Despiece 展開図 爆炸图

Centre Center
Centre Centro
センター 中心

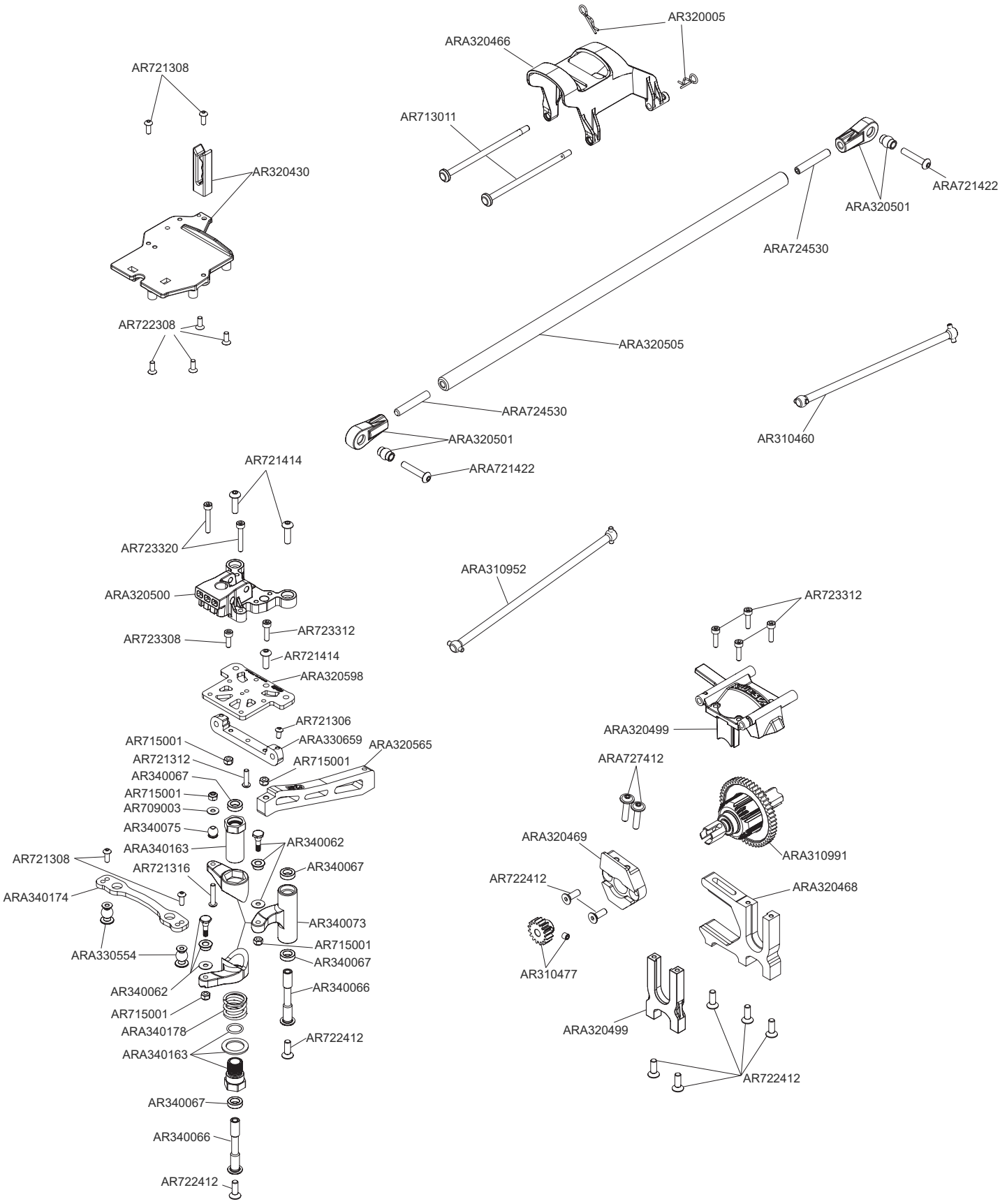

©2020 Horizon Hobby, LLC. ARRMA RC is a trade name of Horizon Hobby Ltd.
Horizon Hobby Ltd is a subsidiary of Horizon Hobby LLC

Exploded View Explosionszeichnungen Vues Éclatées Plano De Despiece 展開図 爆炸图

Rear Hinten
Arrière Trasero リア后

AR715001
AR330492
AR330483
ARA330703
ARA320539
AR715005
AR723312
ARA320612
AR721435
ARA330703
AR330230
AR723316
AR724505
AR713009
AR310449
AR310450
AR721440
ARA330664
AR715001
AR330230
AR310854
AR702001
AR723312
AR724305
ARA610038
AR330483
AR722316
AR721320
ARA311035
ARA610037
AR310431
AR330200
AR330194
AR330483
AR721322
AR721308
AR724310
AR724305
AR330202
AR330231
AR709003
AR330193
ARA330607
AR310854
AR715001
AR715001
ARA320500
AR722320
ARA311066
ARA311028
ARA320546
AR721320
AR330379
ARA310953
ARA330681
ARA310979
AR724410
ARA610039
AR330381
AR310854
ARA320539
AR330381
ARA320568
AR330231
ARA330682
ARA724406
AR330379
AR722320
ARA310976
AR722416
ARA310977
ARA610040
ARA480035
ARA320543
AR721312
ARA320544
ARA320548
AR721316
AR721316
AR721320
ARA320548
AR721316
ARA320545
AR721316
AR721320
AR721312
ARA721422
ARA320546
AR721312
AR702002
AR721316
AR721320
ARA320548
ARA320548
ARA721422
AR721316
AR721320
ARA320540
AR722416

©2020 Horizon Hobby, LLC. ARRMA RC is a trade name of Horizon Hobby Ltd.
Horizon Hobby Ltd is a subsidiary of Horizon Hobby LLC

Shocks Stoßdämpfer Amortisseur Amortiguador 減震器 ショックアブソーバ

MOJAVE EXB FULL OPTION ROLLER

FRONT SHOCK ABSORBER

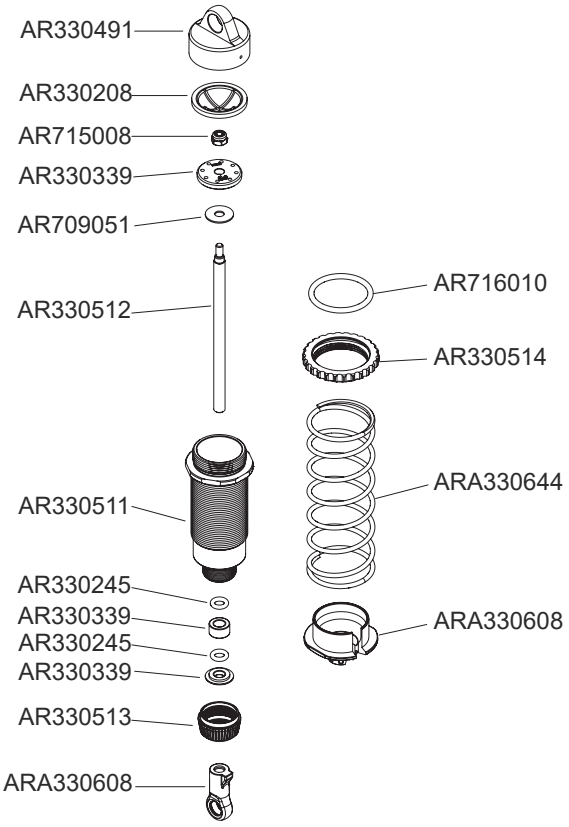

REAR SHOCK ABSORBER

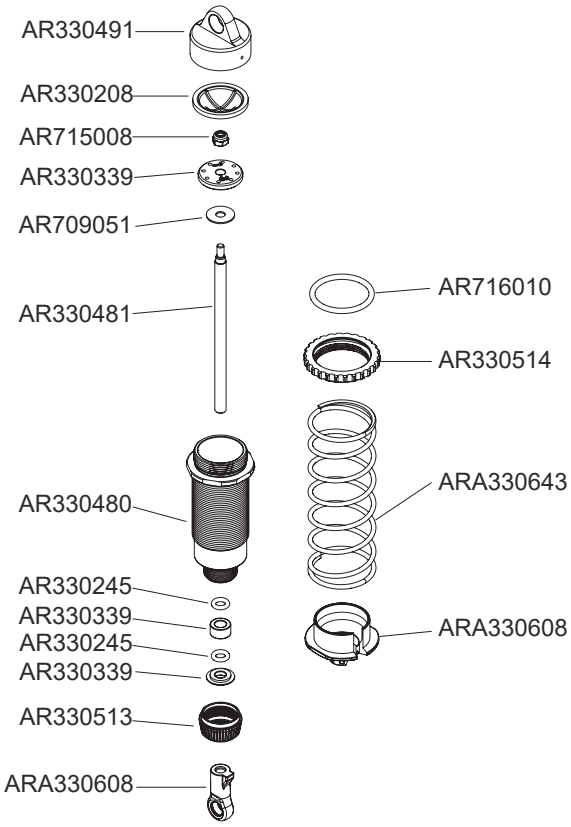

Differential Differential Différentiel Diferencial 差动 差動

CENTER DIFF EXPLODED VIEW

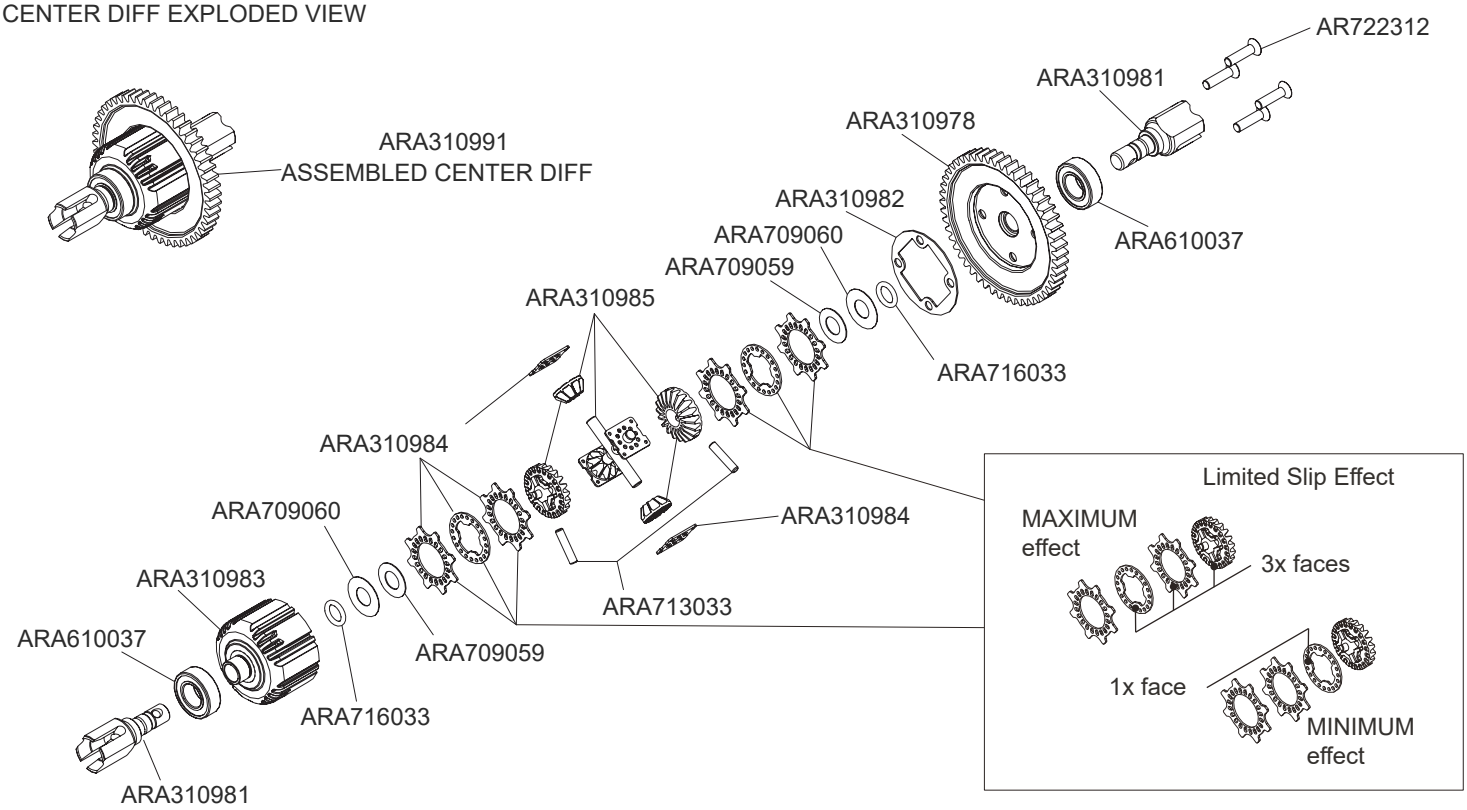

©2020 Horizon Hobby, LLC. ARRMA RC is a trade name of Horizon Hobby Ltd.
Horizon Hobby Ltd is a subsidiary of Horizon Hobby LLC

Differential Differential Différentiel Diferencial 差动 差動

MOJAVE EXB FULL OPTION ROLLER

FRONT DIFF EXPLODED VIEW

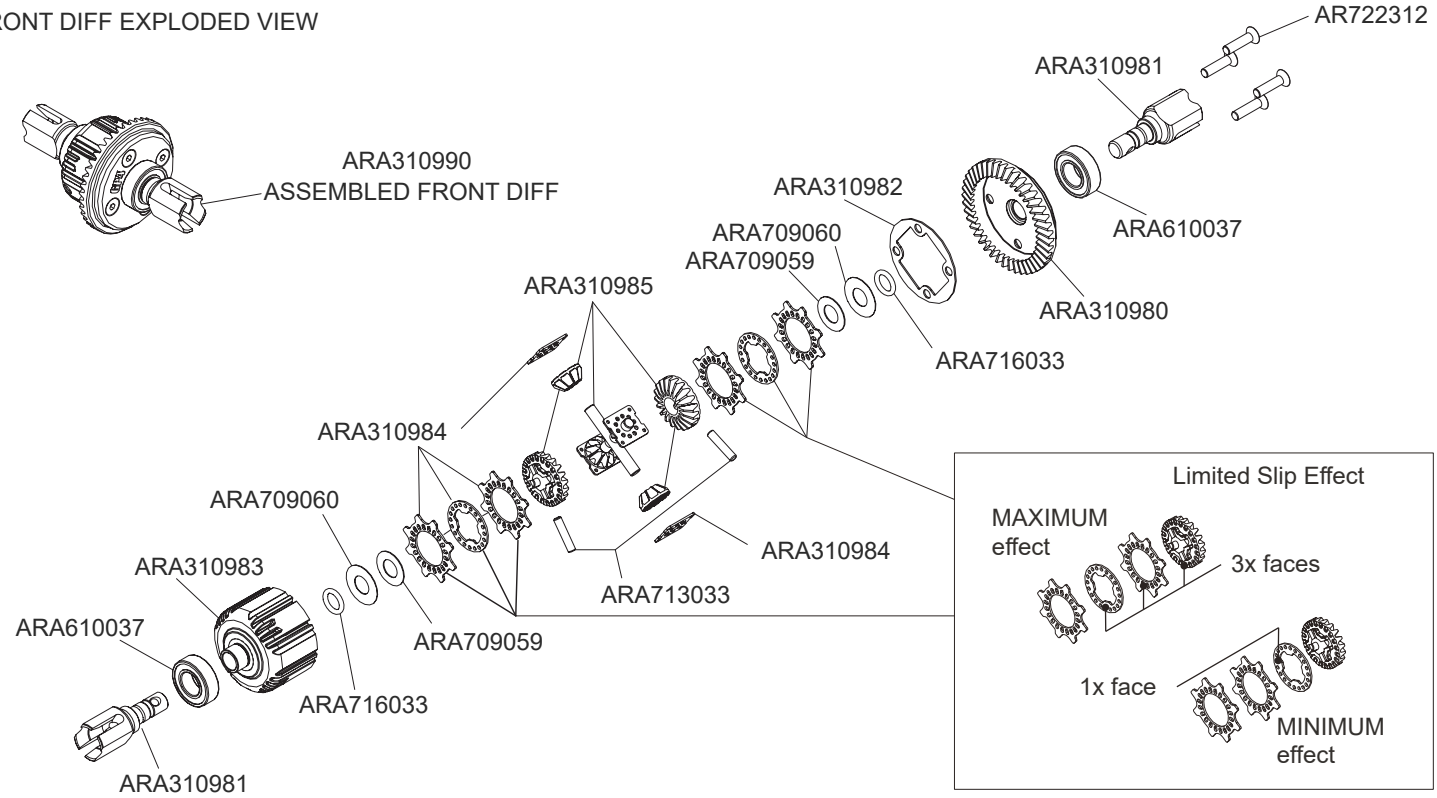

REAR DIFF EXPLODED VIEW

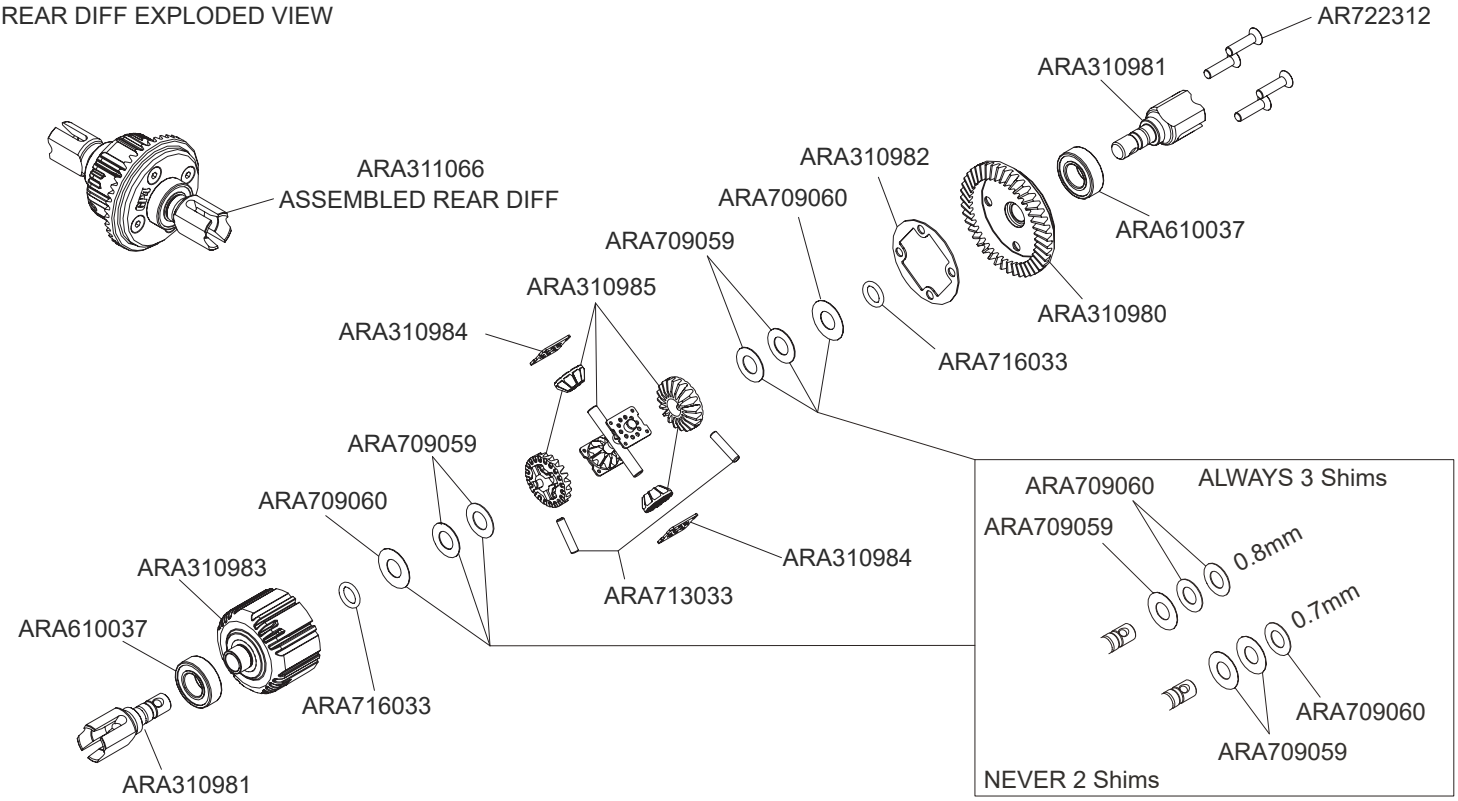

©2020 Horizon Hobby, LLC. ARRMA RC is a trade name of Horizon Hobby Ltd.
Horizon Hobby Ltd is a subsidiary of Horizon Hobby LLC

Exploded View Explosionszeichnungen Vues Éclatées Plano De Despiece 展開図 爆炸图

Body & Tire Karosserie & Reifen Carrosserie & Pneu Cuerpo & Neumático 車身及轮胎 ボディとタイヤ

MOJAVE EXB FULL OPTION ROLLER

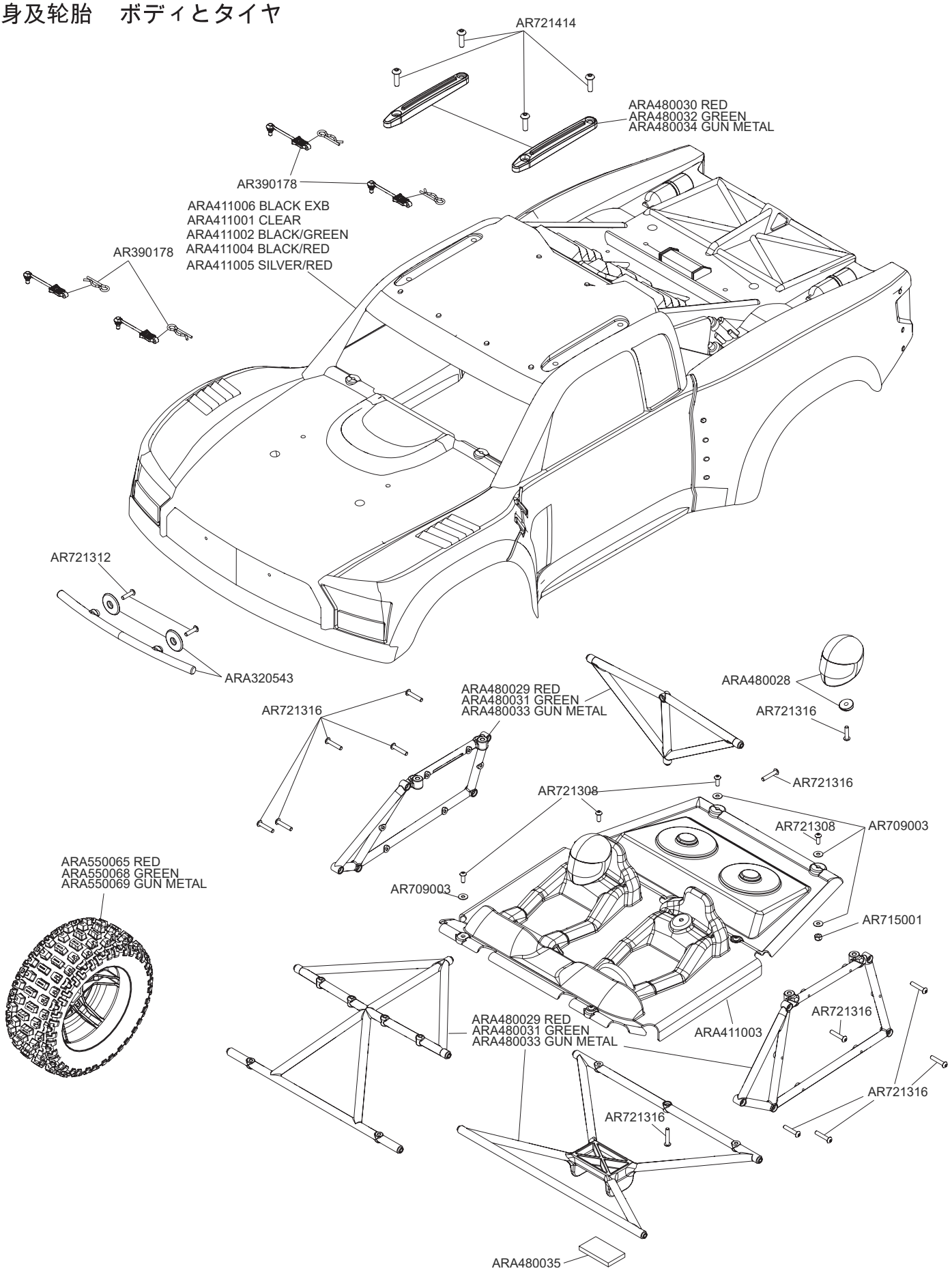

©2020 Horizon Hobby, LLC. ARRMA RC is a trade name of Horizon Hobby Ltd.
Horizon Hobby Ltd is a subsidiary of Horizon Hobby LLC