# TRAXXAS

## The Fastest Name In Radio Control®

# TRX4™

## CHASSIS KIT

Unassembled Kit. Includes Power System and Radio System. Body Sold Separately.

### TRX-4 PREMIUM KIT INCLUDES:

- T-Lock™ Front And Rear Differentials
- Two-Speed Transmission
- XL-5HV Power System
- TQi Radio System with Servos
- Full Color, Detailed Assembly Instructions

# TRX4™

## SCALE AND TRAIL CRAWLER

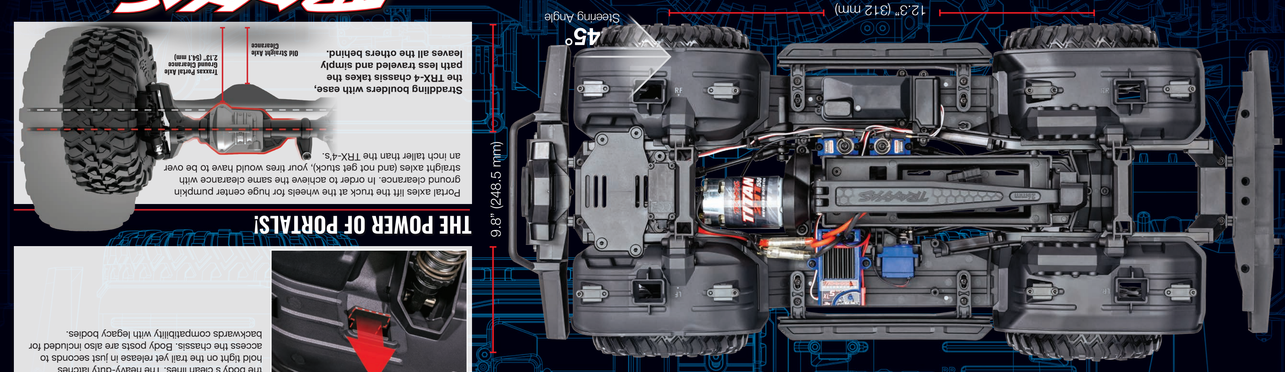


## NEW CLIPLESS BODY MOUNTING SYSTEM

The TRX-4 clipless body mounting system replaces traditional clips with hidden latches that don't interrupt the body's clean lines. The heavy-duty latches hold tight on the trail yet release in just seconds to access the chassis. Body posts are also included for backwards compatibility with legacy bodies.

## THE POWER OF PORTALS!

Portal axles lift the truck at the wheels for huge center pumpkin ground clearance. In order to achieve the same clearance with straight axles (and not get stuck), your tires would have to be over an inch taller than the TRX-4's.




**Straddling boulders with ease, the TRX-4 chassis takes the path less traveled and simply leaves all the others behind.**

# TRAXXAS

## CHASSIS KIT

### WHAT'S IN THE BOX:

- TRX-4 Chassis Kit
- XL-5 HV Waterproof ESC
- Titan 21T 550 Motor
- TQi 2.4GHz 4-Channel Radio System
- Body Posts
- Full Color Step-by-Step Assembly Instructions (Body and some body mounting accessories sold separately)

### WHAT YOU'LL NEED TO ASSEMBLE & RUN YOUR MODEL:

(Sold separately on your hobby dealer)

- 6-8 AA Alkaline Batteries (for transmitter)
- Metric hex drivers
- Phillips screwdrivers (#1 & #2 Tips)
- Basic hand tools such as screwdrivers and needle nose pliers
- Thread Locker (Blue)
- Clear Part Adhesive, or CA glue
- Spare Tires
- Spare Body or Custom Body
- 4 AA Alkaline Batteries

**IMPORTANT: THIS PRODUCT IS NOT DESIGNED FOR CHILDREN AND MINORS YOUNGER THAN 14 YEARS OLD WITHOUT THE ASSISTANCE OF AN ADULT RESPONSIBLE (ADULT SUPERVISION DURING OPERATION AND MAINTENANCE.**

**TRAXXAS** reserves the right to make improvements in its products, and to change specifications without notice. Traxxas reserves the right to make improvements in its products and to change specifications without notice. Traxxas reserves the right to make improvements in its products and to change specifications without notice. Traxxas reserves the right to make improvements in its products